CUDA Performance Checklist

Mark Saroufim

Follow along

Locally or remotely https://lightning.ai/

git clone https://github.com/cuda-mode/lectures

cd lecture8

nvcc -o benchmark *.cu

ncu benchmark

Approach follows style of https://arxiv.org/pdf/1804.06826.pdf

DRAM vs SRAM

DRAM: 1 transistor, 1 capacitor

SRAM: 6 transistors

So SRAM is faster but more expensive, takes up more space and gets hotter

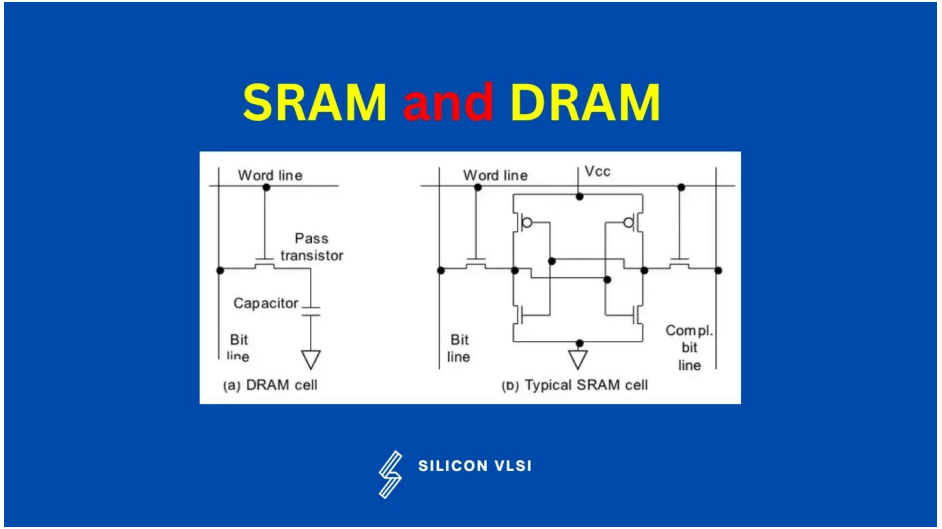

Listen to Bill Dally talks on YouTube: https://www.youtube.com/watch?v=kLiwvnr4L80

https://siliconvlsi.com/why-sram-is-faster-than-dram/

Performance checklist

Coalesced Global Memory Access

Maximize occupancy

Understand if memory or compute bound

Minimize control divergence

Tiling of reused data

Privatization

Thread Coarsening

Rewrite your algorithm using better math

Memory latencies

https://arxiv.org/abs/2208.11174

Microbenchmarks using PTX

TABLE IV
THE MEMORY ACCESSES LATENCIES

Memory type	*CPI (cycles)*
Global memory	290
L2 cache	200
L1 cache	33
Shared Memory (ld/st)	(23/19)

```
1   //reading from shared memory
2   mov.u64          %r1, %clock64;
3   ld.shared.u64    %r25,[shMem1];
4   add.u64          %r40,%r25,32;
5   mov.u64          %r2, %clock64;
6
7   sub.s64          %r7, %r2, %r1;
8   add.u64          %r22, %r7, 10;
9
10  //storing to the shared memory
11  mov.u64          %r1, %clock64;
12  st.shared.u64    [shMem1],50;
13  add.u64          %r24,%r23,32;
14  mov.u64          %r2, %clock64;
15
16  sub.s64          %r16, %r2, %r1;
17  add.u64          %r22, %r16, 10;
```

Fig. 3. Computing device shared memory access latency.

It’s the latency stupid

Throughput is easy, latency is not: “You can get 80 phone lines in parallel, and send one single bit over each phone line, but that 100ms latency is still there.”

Quantization: “For example, to reduce packet size, wherever possible Bolo uses bytes instead of 16-bit or 32-bit words.”

http://www.stuartcheshire.org/rants/latency.html

Memory Coalescing

You can’t reduce latency but you can hide it by reading contiguous elements of memory

Case study - pay attention to

- DRAM Throughput
- Duration
- L1 cache throughput

Occupancy

Tile quantization: matrix dimensions are not divisible by the thread block tile size.

Wave quantization: total number of tiles is not divisible by number of SM on GPU

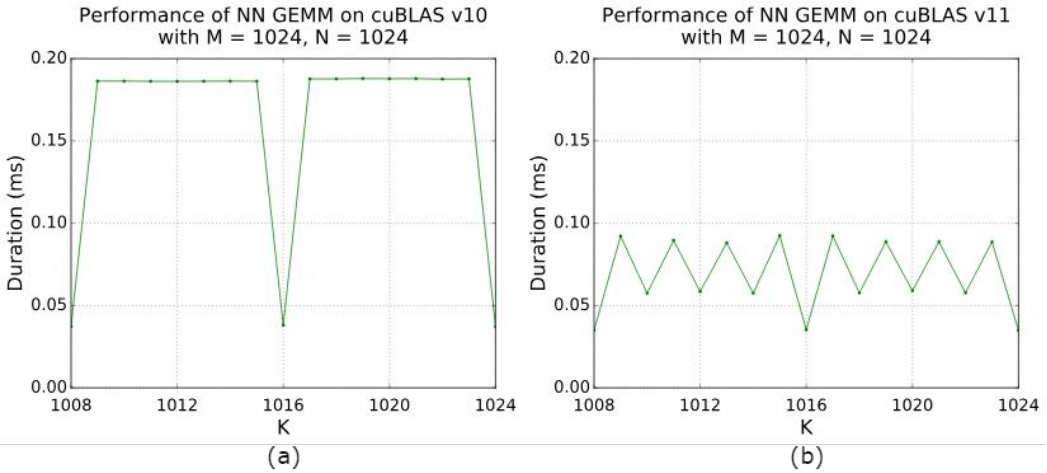

https://docs.nvidia.com/deeplearning/performance/dl-performance-matrix-multiplication/index.html

Solution in PyTorch Land: Padding

Table 1. Tensor Core requirements by cuBLAS or cuDNN version for some common data precisions. These requirements apply to matrix dimensions M, N, and K.

Tensor Cores can be used for...	cuBLAS version < 11.0 cuDNN version < 7.6.3	cuBLAS version ≥ 11.0 cuDNN version ≥ 7.6.3
INT8	Multiples of 16	Always but most efficient with multiples of 16; on A100, multiples of 128.
FP16	Multiples of 8	Always but most efficient with multiples of 8; on A100, multiples of 64.
TF32	N/A	Always but most efficient with multiples of 4; on A100, multiples of 32.
FP64	N/A	Always but most efficient with multiples of 2; on A100, multiples of 16.

https://docs.nvidia.com/deeplearning/performance/dl-performance-matrix-multiplication/index.html

Solution in CUDA Land: Change the kernel

Back to our case study let’s change the kernel launch params

CUDA Occupancy calculator

This used to be an excel spreadsheet!

Turns out optimal for T4 is grid: 40 and blocks 1024

```
cudaOccupancyMaxPotentialBlockSize(&minGridSize, &blockSize, copyDataCoalesced, 0, 0);

// Print suggested block size and minimum grid size
std::cout << "Recommended block size: " << blockSize
          << ", Minimum grid size: " << minGridSize << std::endl;
```

Still has 1 more problem

WRN Memory is more heavily utilized than Compute: Look at the Memory Workload Analysis section to identify the

DRAM bottleneck. Check memory replay (coalescing) metrics to make sure you're efficiently utilizing the

bytes transferred. Also consider whether it is possible to do more work per memory access (kernel fusion) or

whether there are values you can (re)compute.

Roofline model

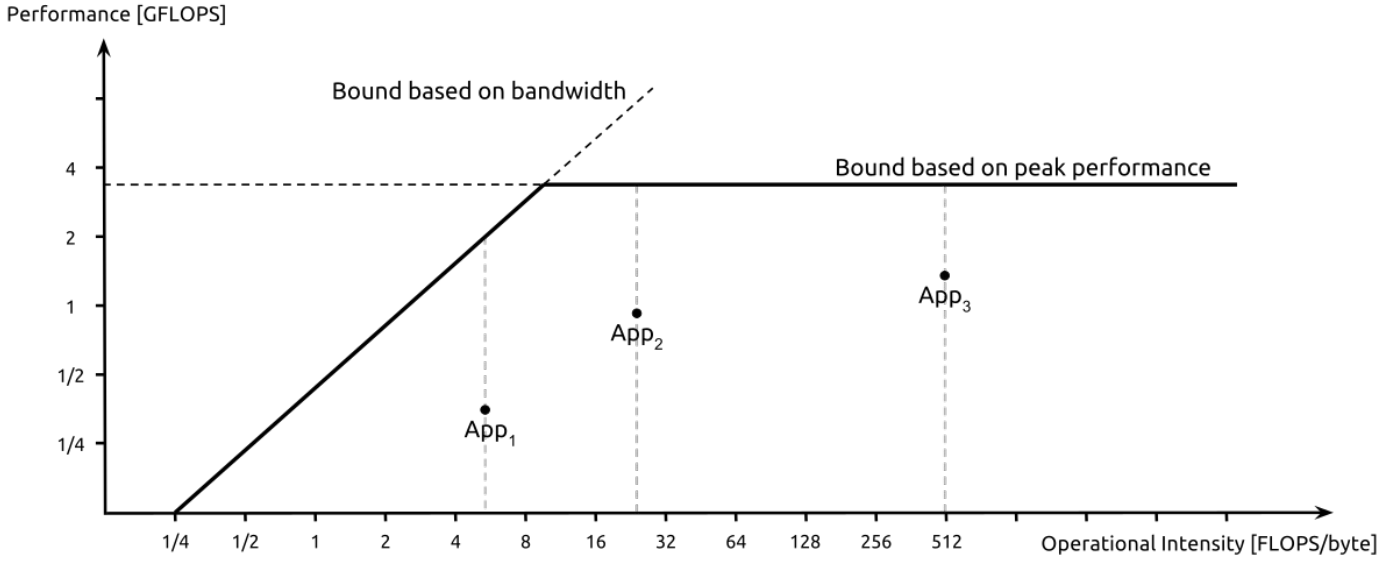

https://en.wikipedia.org/wiki/Roofline_model

Arithmetic intensity

Math limited if: $\frac{FLOPS}{bytes} > \frac{math\ throughput}{memory\ bandwidth}$

Left metric is algorithmic mix of math and memory ops called **arithmetic intensity**

Right metric is the processor's **ops/byte ratio** - e.g. V100 can execute 125/0.9=139 FLOPS/B

Comparing arithmetic intensity to ops/byte ratio indicates what algorithm is limited by!

Operation	Arithmetic Intensity	Limiter
Residual addition	0.166	Memory
ReLU activation	0.25	Memory
Batch normalization	O(10)	Memory
Convolution	1-10000+	Memory/Math

(assumes FP16 data)

9 NVIDIA

https://developer.download.nvidia.com/video/gputechconf/gtc/2019/presentation/s9926-tensor-core-performance-the-ultimate-guide.pdf

Back of the envelope

Apply ReLU function elementwise on a vector: f(x) = max(0, x)

For each element 1 read, 1 comparison op and maybe 1 write

Assume float32 -> 4 bytes (32 / 8)

Ops: 1

Byte: 2 * 4 = 8

So arithmetic intensity in the worst case ⅛

Best case 1/4

1/4 < 1: Memory bound!

Let’s do this again with float16

Apply ReLU function elementwise on a vector: f(x) = max(0, x)

For each element 1 read, 1 comparison op and maybe 1 write

Assume float16 -> 2 bytes (16 / 8)

Ops: 1

Byte: 2 * 2 = 4

So arithmetic intensity in the worst case 1/4

Ok last one: Matmul

A = [M, N]

B = [N, K]

C = A * B

FLOPS: For each output in C need dot product between row of A and column of B -> N multiplications and N additions -> M * K * 2N

Bytes: MN + NK (load each matrix) and then write the output (MK): MN + NK + MK

AI = 2MNK / (MN + NK + MK)

Compute bound for large matrices otherwise bandwidth bound

TL;DR

Bandwidth Bound Kernels: Fuse, quantize, compile

Compute Bound Kernels: Write a better algorithm

Tiling of reused data

Already covered in past CUDA MODE lectures
https://www.youtube.com/@CUDAMODE

Less global memory traffic

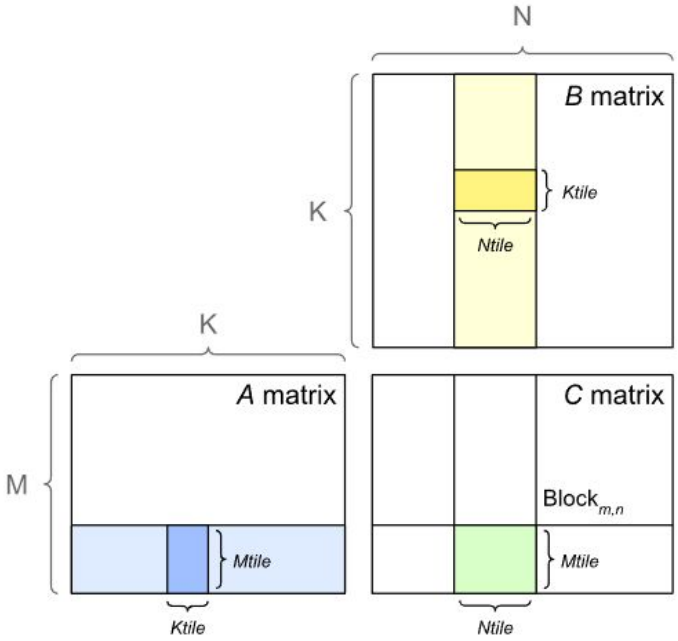

Minimize control divergence

Related to occupancy but if conditions can be a source of a lot of threads not doing anything, this is bad!

Drastic difference

processArrayWithDivergence took 0.074272 milliseconds

processArrayWithoutDivergence took 0.024704 milliseconds

ncu --set full divergence

(Not sure why ncu shows avg divergence as 0)

Thread Coarsening

So far threads do as little as possible

But threads can do more and be faster

main ~/lecturex ./benchmark

VecAdd execution time: 0.245600 ms

VecAddCoarsened execution time: 0.015264 ms

Half as many threads launched

Why is this faster? Hint: AI

Privatization

Apply partial updates to private copy of data before writing back to global or shared memory.

Example: Sliding window algorithm

```
1   2  [3] [4] [5]  6   7
```

Higher occupancy

Higher compute SM throughput

Lower DRAM throughput

softmax(QK^T) V

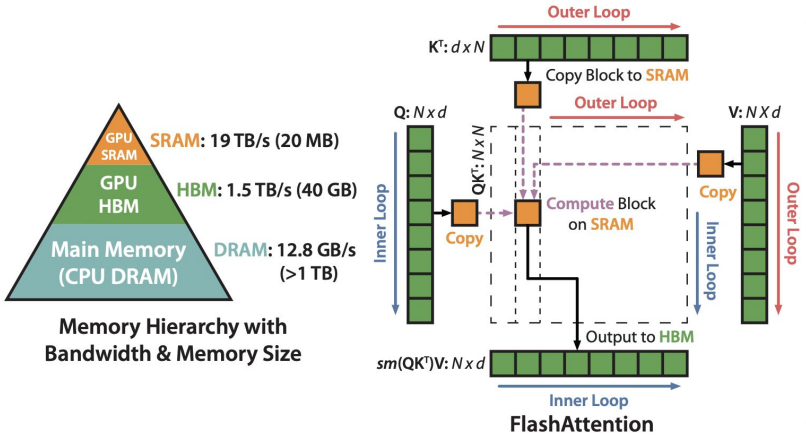

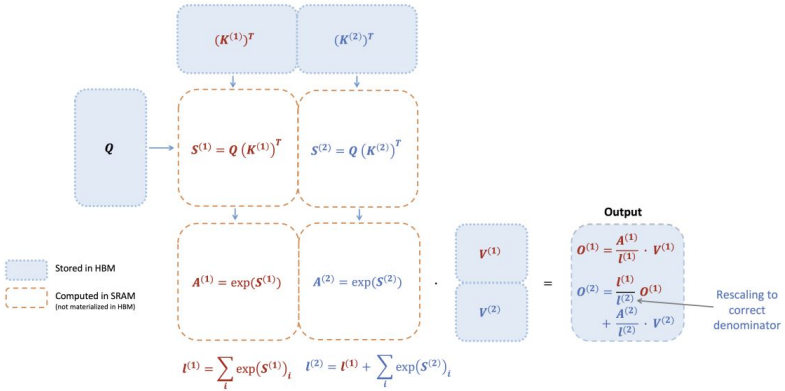

Figure 1: Diagram of how FlashAttention forward pass is performed, when the key **K** is partitioned into two blocks and the value **V** is also partitioned into two blocks. By computing attention with respect to each block and rescaling the output, we get the right answer at the end, while avoiding expensive memory reads/writes of the intermediate matrices **S** and **P**. We simplify the diagram, omitting the step in softmax that subtracts each element by the row-wise max.

https://arxiv.org/abs/2205.14135

https://arxiv.org/abs/2307.08691

Be better at math

Flash Attention v1 has 2 tricks

softmax(QK^T) V

- Tile based shared memory attention computation
- Online softmax

Online normalizer calculation for softmax

Maxim Milakov
NVIDIA
mmilakov@nvidia.com

Natalia Gimelshein
NVIDIA
ngimelshein@nvidia.com

Abstract

The Softmax function is ubiquitous in machine learning, multiple previous works suggested faster alternatives for it. In this paper we propose a way to compute classical Softmax with fewer memory accesses and hypothesize that this reduction in memory accesses should improve Softmax performance on actual hardware. The benchmarks confirm this hypothesis: Softmax accelerates by up to 1.3x and Softmax+TopK combined and fused by up to 5x.

https://arxiv.org/abs/1805.02867

Softmax

3 memory accesses per element

- 2 reads
- 1 store

Also can overflow!

1 solution is to store result of exponent in float64 but not great

2 Original softmax

Function $y = Softmax(x)$ is defined as:

$$y_i = \frac{e^{x_i}}{\sum_{j=1}^{V} e^{x_j}} \tag{1}$$

where $x, y \in \mathbb{R}^V$. The naive implementation (see algorithm 1) scans the input vector two times - one to calculate the normalization term d_V and another to compute output values y_i - effectively doing three memory accesses per vector element: two loads and one store.

Algorithm 1 Naive softmax

```
d_0 ← 0
for j ← 1, V do
    d_j ← d_{j-1} + e^{x_j}
end for
for i ← 1, V do
    y_i ← e^{x_i} / d_V
end for
```

Safe softmax

4 memory access per element

- 3 read
- 1 store

Unfortunately, on real hardware, where the range of numbers represented is limited, the line 3 of the algorithm 1 can overflow or underflow due to the exponent. There is a safe form of (1), which is immune to this problem:

$$y_i = \frac{e^{x_i - \max_{k=1}^{V} x_k}}{\sum_{j=1}^{V} e^{x_j - \max_{k=1}^{V} x_k}} \tag{2}$$

All major DL frameworks are using this safe version for the Softmax computation: TensorFlow

Algorithm 2 Safe softmax

1: $m_0 \leftarrow -\infty$
2: **for** $k \leftarrow 1, V$ **do**
3: $\quad m_k \leftarrow \max(m_{k-1}, x_k)$
4: **end for**
5: $d_0 \leftarrow 0$
6: **for** $j \leftarrow 1, V$ **do**
7: $\quad d_j \leftarrow d_{j-1} + e^{x_j - m_V}$
8: **end for**
9: **for** $i \leftarrow 1, V$ **do**
10: $\quad y_i \leftarrow \frac{e^{x_i - m_V}}{d_V}$
11: **end for**

Online Softmax

Key insight is line 5 where we can do localwise corrections

e^{m-n} = e^m e^-n

Cancel out the fake max and use the true max

3 memory access per element

- 2 read
- 1 store

Algorithm 3 Safe softmax with online normalizer calculation

1: $m_0 \leftarrow -\infty$
2: $d_0 \leftarrow 0$
3: **for** $j \leftarrow 1, V$ **do**
4: $\quad m_j \leftarrow \max(m_{j-1}, x_j)$
5: $\quad d_j \leftarrow d_{j-1} \times e^{m_{j-1}-m_j} + e^{x_j - m_j}$
6: **end for**
7: **for** $i \leftarrow 1, V$ **do**
8: $\quad y_i \leftarrow \frac{e^{x_i - m_V}}{d_V}$
9: **end for**

TL;DR

Table from the Book

+ Compute vs Memory Bound workflows

+ Better Math

CUDA MODE: Wield math and computers to reach brrr nirvana

Table 6.1 A checklist of optimizations.

Optimization	Benefit to compute cores	Benefit to memory	Strategies
Maximizing occupancy	More work to hide pipeline latency	More parallel memory accesses to hide DRAM latency	Tuning usage of SM resources such as threads per block, shared memory per block, and registers per thread
Enabling coalesced global memory accesses	Fewer pipeline stalls waiting for global memory accesses	Less global memory traffic and better utilization of bursts/ cache lines	Transfer between global memory and shared memory in a coalesced manner and performing uncoalesced accesses in shared memory (e.g., corner turning) Rearranging the mapping of threads to data Rearranging the layout of the data
Minimizing control divergence	High SIMD efficiency (fewer idle cores during SIMD execution)	–	Rearranging the mapping of threads to work and/or data Rearranging the layout of the data
Tiling of reused data	Fewer pipeline stalls waiting for global memory accesses	Less global memory traffic	Placing data that is reused within a block in shared memory or registers so that it is transferred between global memory and the SM only once
Privatization (covered later)	Fewer pipeline stalls waiting for atomic updates	Less contention and serialization of atomic updates	Applying partial updates to a private copy of the data and then updating the universal copy when done
Thread coarsening	Less redundant work, divergence, or synchronization	Less redundant global memory traffic	Assigning multiple units of parallelism to each thread to reduce the price of parallelism when it is incurred unnecessarily

optimizations that are common across different applications and that program
should first consider. In the second and third parts of the book, we
optimizations in this checklist to various parallel patter